BARROW COUNTY

RESIDENTIAL DRIVEWAY PERMIT REQUEST

License & Permits
30 North Broad Street
Winder, GA 30680
770-307-3021

County Road Name: _____

_____

Permit No.: _____

I, _____, of _____
Name of Applicant *P.O. Box and Address*

_____ request permission to construct a residential driveway on _____
Phone Number *County Road Name*

in Barrow County. The driveway will be constructed on the _____ side of the County road (*same as above*) at a distance of _____ feet
NSEW

_____ of the centerline of _____.
NSEW *Street or Road Name (nearest intersection)*

By signing this request I agree to construct or have constructed this driveway as described and illustrated below. I also agree that I will be responsible for the maintenance of this driveway including pipe, surface course, and slopes.

Date _____ Signature _____

****Above information is to be provided by the owner prior to issuance.****

This drive to serve a single family dwelling only and may not be converted to any other use without approval of County.

Illustration of Typical Plan & Profile for Drive

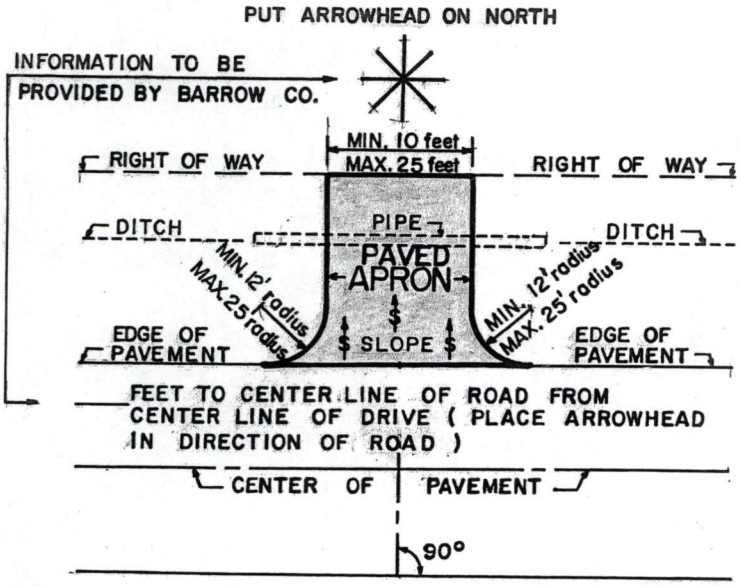

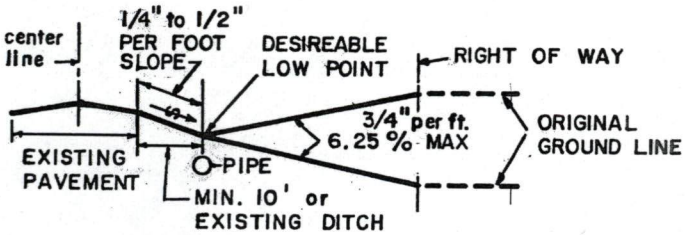

OTHER REQUIREMENTS : _____

_____

Special Requirements

1. Extend pipe as necessary to obtain a 4:1 or flatter slope.
2. The pipe shall be GA DOT standard 1030D (or as specified in the Barrow County Development Regulations) _____ ft. long _____ inches in diameter. Minimum 1' of cover over pipe.
3. Existing surface flow to remain. Water cannot be diverted to Barrow County right-of-way.
4. No headwalls to be constructed on pipe.
5. No brick or other hazardous type mailbox allowed on right-of-way (mailbox shall be located on exit side). All driveways should have turn around pad off right-of-way to prevent backing into the road.
6. All disturbed right-of-way to be regrassed to Barrow County specifications.
7. If driveway is used for construction entrance, it must be stabilized with 4" of stone as a minimum.
8. The blue permit poster must be displayed at the proposed driveway location in plain view until work is inspected and accepted by Barrow County.
9. Applicant to give Barrow County Driveway Inspector a 24-hour notice before work begins and before each phase of construction.
10. Advance warning signs shall be required while working on Barrow County right-of-way.
11. Driveways on a dirt road shall have 4" of gravel placed on driveway from edge of road to end of road maintenance easement or right-of-way as a minimum.
12. Driveways on a paved road shall have a paved apron (*see illustration for size & location of paved apron*). Paved apron material shall consist of either a minimum of 6" of class "A" 3000 p.s.i. concrete, or a minimum of 5" of compacted graded aggregate base and 3" of compacted "E" or "F" plant mix asphalt. All of the above to be placed on suitable compacted sub-grade. Drive to be flush with existing edge of pavement.
13. Permittee shall be responsible for any damage(s) to existing County road as a result of driveway construction.
14. The inlet and outlet end of all driveway culverts shall have safety flared – end - sections that meet the standards of GA DOT 1120 or 1125

Permit Approved By: _____

Title: _____

This _____ **day of** _____, **20**____

INSTRUCTIONS FOR REQUESTING A RESIDENTIAL DRIVEWAY PERMIT

---

1. Permittee to fill out top portion of the Residential Driveway Permit Request.

2. If permittee has a question, needs help filling out the top portion of the Residential Driveway Permit Request, or needs assistance measuring distance, the permittee can request an on-site meeting with the Barrow County Driveway Inspector @ 770-307-3015 OR 770-867-0664

3. After permittee has completed the top portion of the Residential Driveway Permit Request, the permittee shall submit it to the License & Permits department with required fee.

4. License & Permits will then give the request to the Driveway Inspector. The Driveway Inspector will visit the site and evaluate the request and either approve or not approve the request.

5. The Driveway Inspector will then provide License & Permits with the approved or unapproved Driveway Permit Request.

6. License & Permits will then notify the permittee with the results of the permit request.

7. If the Driveway Inspector approves the Driveway Permit Request, then License & Permits will give a copy of the approved permit request along with a blue permit poster to the permittee. **Barrow County will provide information on blue permit poster.**
   The permittee shall display the blue permit poster at the driveway location, in plain view until work is inspected and accepted by Barrow County.
   The permittee shall adhere to all requirements and illustration as shown on approved Residential Driveway Permit Request.

8. If the Driveway Inspector does not approve the driveway permit request, then License & Permits will give a copy of the <u>unapproved</u> permit request to the permittee. The permittee can contact the Driveway Inspector (*name & number above*) to discuss reason(s) for the unapproved permit request.

BARROW COUNTY DRIVEWAY SITE LOCATION CARD

DATE_____

NAME _____

LOCATION_____

STATE	PROJECT NUMBER	SHEET NO.	TOTAL SHEETS
GA.			

ALTERNATE I

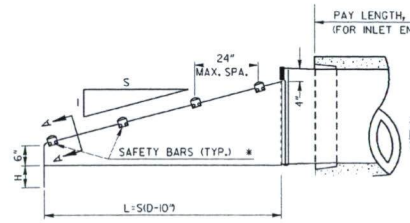

SIDE ELEVATION

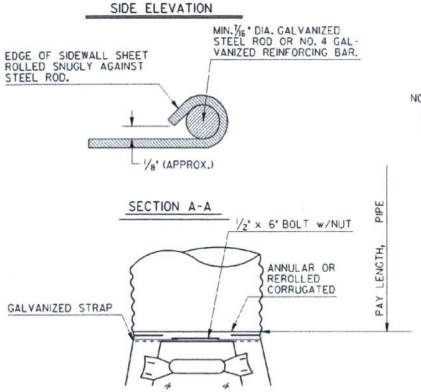

TYPE #1 CONNECTOR DETAIL

THRU 24"

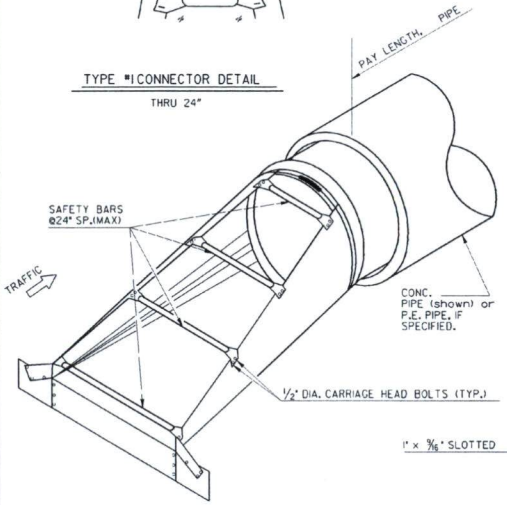

TYPICAL PICTORAL VIEW

(WITH CONCRETE PIPE)

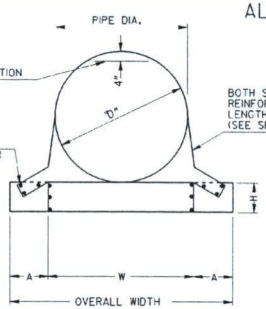

* NUMBER OF BARS REQUIRED WILL VARY DEPENDING ON THE LENGTH OF THE END SECTION. SPACINGS BETWEEN CENTERS OF BARS SHALL NOT EXCEED 24 INCHES.

BOTH SIDES SHALL HAVE A REINFORCED EDGE FULL LENGTH OF END SECTION (SEE SECTION A-A)

FRONT VIEW

NOTE:

Payment for Safety End Section Shall Include Tapered Sleeve.

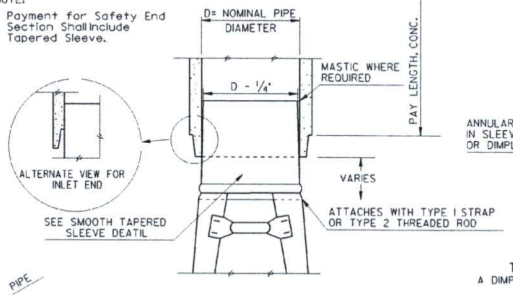

TAPERED SLEEVE FOR ATTACHING STEEL END SECTIONS TO SMOOTH PIPE

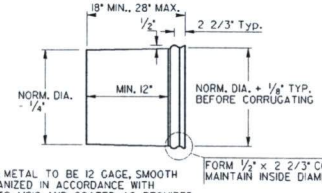

NOTE: METAL TO BE 12 GAGE, SMOOTH GALVANIZED IN ACCORDANCE WITH AASHTO M218-AND COATED AS REQUIRED FOR END SECTION.

TYPE 4 CONNECTOR SMOOTH TAPERED SLEEVE DETAIL

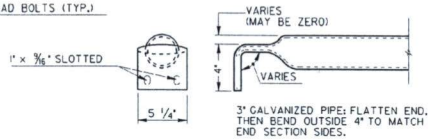

3" GALVANIZED PIPE: FLATTEN END. THEN BEND OUTSIDE 4" TO MATCH END SECTION SIDES.

TYPICAL DETAIL OF SAFETY BARS

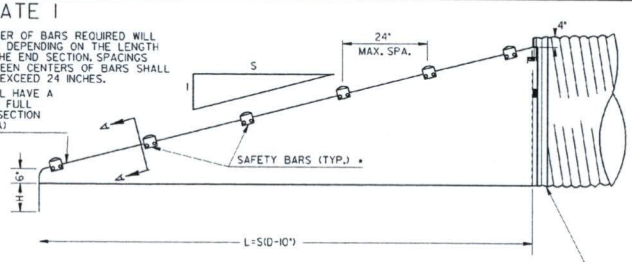

SIDE ELEVATION

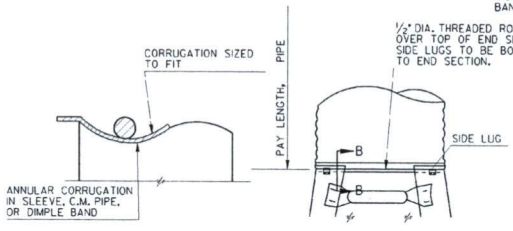

SECTION B-B

TYPE #2 CONNECTOR DETAILS

FOR 30" AND LARGER

TYPE 3 ALTERNATE CONNECTOR (NOT SHOWN)

A DIMPLE BAND COLLAR MAY BE SHOP BOLTED TO THE END SECTION

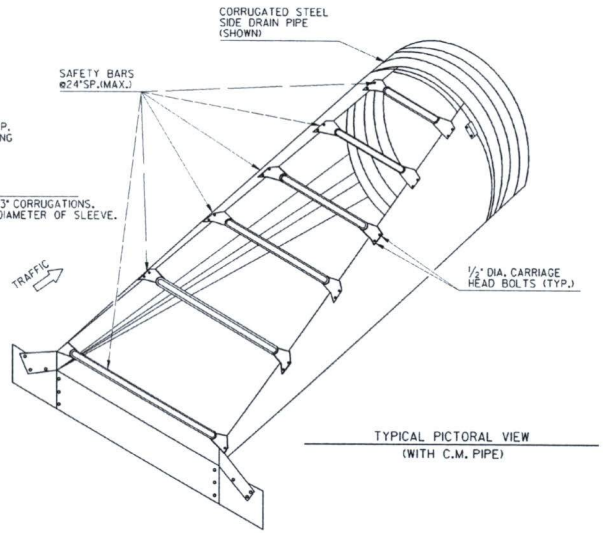

TYPICAL PICTORAL VIEW

(WITH C.M. PIPE)

GENERAL NOTES

ALTERNATE I

GALVANIZED STEEL SHEET

USE GALVANIZED STEEL SHEET CONFORMING TO AASHTO M 218.

CONNECTORS

PAYMENT FOR END SECTION SHALL INCLUDE CONNECTION OF THE TYPE REQUIRED FOR THE SIDE DRAIN USED.

SAFETY BARS

SHALL BE 3" SCHEDULE 40 GALVANIZED STEEL PIPE. PIPE TO BE GALVANIZED AFTER FORMING. SAFETY BAR(S) SHALL BE REQUIRED FOR ALL SAFETY END SECTIONS.

MISCELLANEOUS DETAILS

DETAILS OF CONSTRUCTION MATERIALS AND WORKMANSHIP NOT SHOWN ON THIS DRAWING SHALL CONFORM TO THE MANUFACTURER'S REQUIREMENTS, SUBJECT TO APPROVAL BY THE D.O.T.'S LABORATORY. A SAMPLE MUST BE SUBMITTED TO PRE-QUALIFY THE PRODUCT.

SIZES, DIMENSIONS, AND THICKNESSES

PIPE DIA. (IN.)	MIN. THICK.		DIMENSIONS (INCHES)				* L DIMENSION			
	IN.	GAGE	A	H	W (D+6")	OVERALL WIDTH	SLOPE (S:1)	LENGTH (IN.)	SLOPE (S:1)	LENGTH (IN.)
15	.064	16	8	6	21	37	4:1	20	6:1	30
18	.064	16	8	6	24	40	4:1	32	6:1	48
24	.064	16	8	6	30	43	4:1	56	6:1	84
30	.109	12	12	9	36	60	4:1	80	6:1	120
36	.109	12	12	9	42	66	4:1	104	6:1	156
42	.109	12	16	12	48	80	4:1	128	6:1	192
48	.109	12	16	12	54	86	4:1	152	6:1	228

*SEE STD. NO. 903T FOR SLOPES AT SIDE ROAD OR AT DRIVES.

SPECIAL NOTE:

WHERE THE LENGTH OF DITCH OR THE DISTANCE BETWEEN TOE POINTS OF END SECTIONS ON SEPARATE INSTALLATIONS WOULD BE LESS THAN 30 FT., CONTINUED S.D. PIPE WITH AN INTERMEDIATE INLET OR OTHER ALTERNATE MAY BE SPECIFIED INSTEAD.

BY	REVISION	DATE
G.L.O.	REVISED GENERAL NOTES CONVERTED TO STANDARD	1-28-05
R.M.L.	PAY ITEM REVISION	12-4-94
R.M.L.	GEN. REVISION	11-18-94
R.M.L.	REFER TO STD. 903-T	12-20-93

DEPARTMENT OF TRANSPORTATION

STATE OF GEORGIA

STANDARD

SAFETY END SECTION

(METAL)

(FOR SIDE DRAIN PIPE-OR FOR STORM DRAIN PIPE PARALLEL TO MAINLINE)

ALTERNATE I

NO SCALE

SEPT., 1993

DESIGNED ____ (SUBMITTED) STATE ROAD & AIRPORT DESIGN ENGINEER

DRAWN ____

TRACED ____ (APPROVED) CHIEF ENGINEER

CHECKED ____

NUMBER 1122

SHEET 1 OF 3

3/23/2005 9:55:37 AM \\GDOT-DSN1\SOPLOT\QCF\GO_TIFF_OUTPUT.QCF OCWENS M:\GARY\REVISED 1122 AND 1122P\1122P.FRF GO-RD6

STATE	PROJECT NUMBER	SHEET NO.	TOTAL SHEETS

ALTERNATE 2

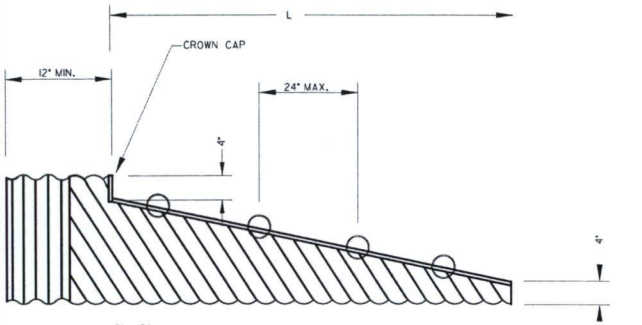

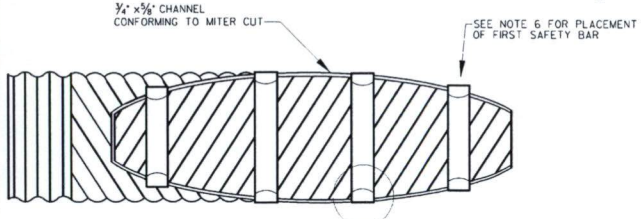

END TREATMENT DIMENSIONS FOR ARCHED METAL PIPE				
PIPE DIA. (INCHES)	GAGE	SHEET THICKNESS (INCHES)	* 4:1 SLOPE L DIMENSION	* 6:1 SLOPE L DIMENSION
17"x13"	16	.064"	1'-8"	2'-6"
21"x15"	16	.064"	2'-4"	3'-6"
24"x18"	16	.064"	3'-4"	5'-0"
28"x20"	16	.064"	4'-0"	6'-0"
35"x24"	14	.079"	5'-4"	8'-0"
42"x29"	14	.079"	7'-0"	10'-6"
49"x33"	14	.079"	8'-4"	12'-6"
57"x38"	12	.109"	10'-0"	15'-0"
64"x43"	12	.109"	11'-8"	17'-6"
71"x47"	10	.138"	13'-0"	19'-6"

* SEE STD. NO. 903IT FOR SLOPES AT SIDE ROAD OR AT DRIVES.

END TREATMENT DIMENSIONS FOR CIRCULAR METAL AND CIRCULAR CONCRETE PIPES				
PIPE DIA. (INCHES)	GAGE	SHEET THICKNESS (INCHES)	* 4:1 SLOPE L DIMENSION	* 6:1 SLOPE L DIMENSION
15"	16	.064"	2'-4"	3'-6"
18"	16	.064"	3'-4"	5'-0"
21"	16	.064"	4'-4"	6'-6"
24"	16	.064"	5'-4"	8'-0"
30"	16	.064"	7'-4"	11-0"
36"	16	.064"	9'-4"	14'-0"
42"	14	.079"	11'-4"	17'-0"
48"	14	.079"	13'-4"	20'-0"
54"	14	.079"	15'-4"	23'-0"
60"	12	.109"	17'-4"	26'-0"

* SEE STD. NO. 903IT FOR SLOPES AT SIDE ROAD OR AT DRIVES.

GENERAL NOTE ALTERNATE 2:

1. THE MATERIAL USED IN FABRICATION OF SLOPED END SECTION SHALL CONFORM TO THE APPLICABLE REQUIREMENTS OF AASHTO M 218 (GALVANIZED STEEL)
2. SLOPED END SECTIONS SHALL BE FORMED FROM FULL CIRCLE PIPE, MAY BE FORMED INTO PIPE ARCHES, WHERE SPECIFIED, AND SHALL MEET ALL REQUIREMENTS FOR CORRUGATION, GAGE, AND OTHER FABRICATION REQUIREMENTS.
3. THE EXPOSED EDGE CUT ON THE TOP SHALL BE COVERED WITH A PROTECTIVE CAP OVERLAPPING THE TOP OF THE ARCH BY NOT LESS THAN ⅝INCH. THE 4 TO 1OR 6 TO 1 BEVEL SHALL BE ENCASED WITH A PROTECTIVE CAP OVERLAPPING EACH SIDE OF THE CUT BY NOT LESS THAN ⅝INCH. THE PROTECTIVE CAP IS TO BE THE SAME MATERIAL AS THE PIPE AND MINIMUM 14 GAGE (.079"). PROTECTIVE CAPS SHALL BE WELDED WITH ½INCH WELDS ALTERNATING FROM SIDE TO SIDE OFTHE CAP AT 12 INCH INTERVALS. WELDS SHALL BE AT THE ENDS OF ALL CAPS, REGARDLESS OF SPACING. REPAIR DAMAGED GALVANIZED COATINGS IN ACCORDANCE WITH GDOT STANDARD SPECIFICATIONS SECTION 645.
4. CONNECTIONS OF GALVANIZED STEEL END TREATMENTS TO CORRUGATED ALUMINUM OR ALUMINIZED STEEL PIPE MUST UTILIZED A POLYMER COATED GALVANIZED STEEL BAND MEETING THE REQUIREMENTS OF AASHTO M 256 84.
5. ADAPTER SLEEVE IS TO BE CONSTRUCTED OF GALVANIZED STEEL CONFORMING TO THE REQUIREMENTS OF AASHTO M 218, MINIMUM 12 GAGE (.109") MATERIAL.
6. BOTTOM SAFETY BAR SHALL HAVE A MAXIMUM CLEARANCE OF 5" WHEN MEASURED FROM THE BOTTOM OF THE INSTALLED BAR TO INSIDE CREST OF PIPE CORRUGATION.

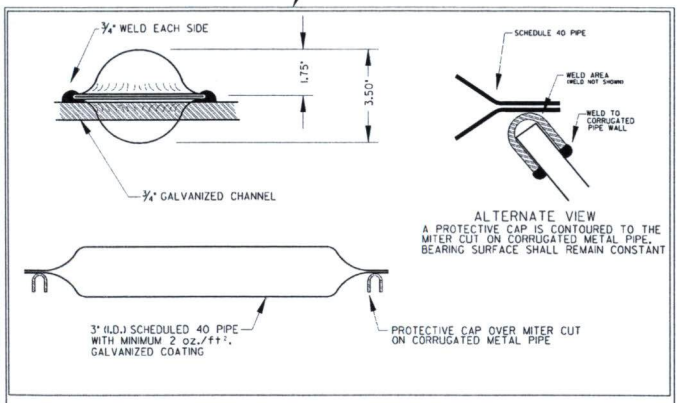

NOTE: ENDS OF BARS SHALL BE WELDED SOLID TO PREVENT SOIL AND WATER INFLITRATION

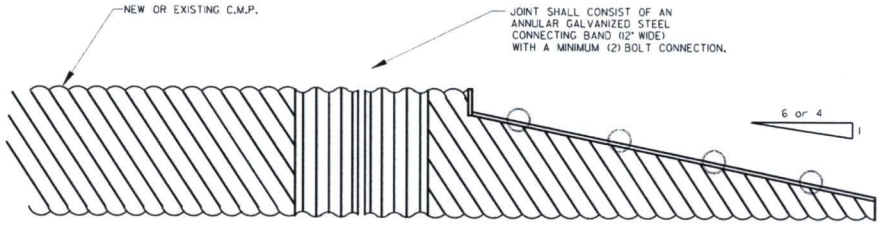

SPECIAL NOTE:

WHERE THE LENGTH OF DITCH OR THE DISTANCE BETWEEN TOE POINTS OF THE END SECTION ON SEPARATE INSTALLATIONS WOULD BE LESS THAN 30 FT., CONTINUED S.D. PIPE WITH AN INTERMEDIATE INLET OR OTHER ALTERANTE MAY BE SPECIFIED INSTEAD.

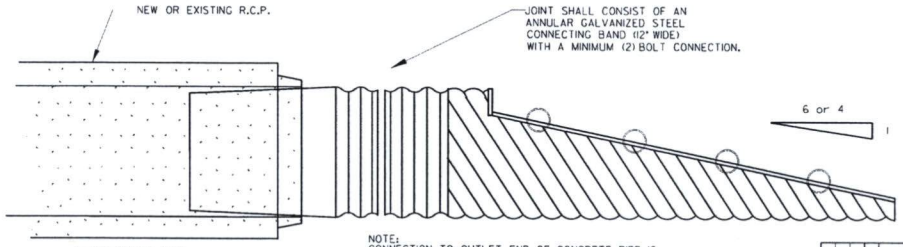

NOTE:
CONNECTION TO OUTLET END OF CONCRETE PIPE IS ILLUSTRATED. CONNECTION TO INLET END WILL BE PERFORMED IN THE SAME MANNER.

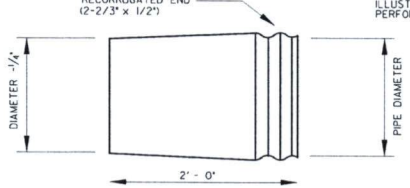

ADAPTER SLEEVE

		DATE	DEPARTMENT OF TRANSPORTATION STATE OF GEORGIA
		REVISION	STANDARD SAFETY END SECTION (METAL) (FOR SIDE DRAIN PIPE-OR FOR STORM DRAIN PIPE PARALLEL TO MAINLINE) ALTERNATE 2
			NO SCALE — JAN. 2005
		BY	DESIGNED ___ DRAWN ___ TRACED ___ CHECKED ___ (SUBMITTED) STATE ROAD & AIRPORT DESIGN ENGINEER (APPROVED) CHIEF ENGINEER
			NUMBER 1122 — SHEET 2 OF 3

3/23/2005 9:55:37 AM \\GDOT-DSN1\SOPLOT\QCF\GO_TIFF_OUTPUT.QCF OCWENS M:\GARY\REVISED 1122 AND 1122P\1122P.FRF

STATE	PROJECT NUMBER	SHEET NO.	TOTAL SHEETS
GA.			

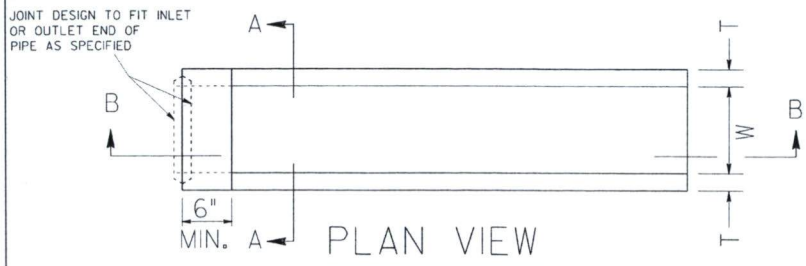

PLAN VIEW

(BAR GRATE NOT SHOWN)

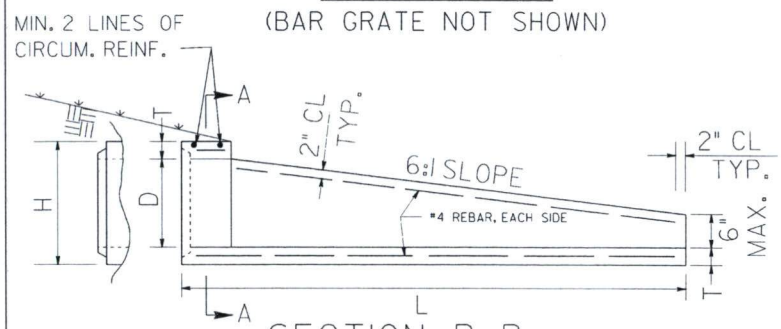

SECTION B-B

ALTERNATE 3

PIPE DIA	T (MIN)	D	H	L
15"	3"	15"	21"	4'-6"
18"	3"	18"	24"	6'-0"
24"	3"	24"	30"	9'-0"
30"	4"	30"	38"	12'-6"
36"	4"	36"	44"	15'-6"
42"	4"	42"	50"	18'-6"
48"	5"	48"	58"	22'-0"

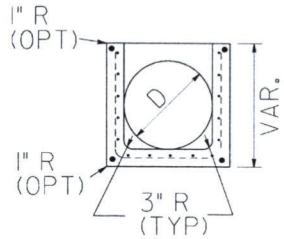

SECTION A-A

GENERAL NOTES:

1. CONCRETE STRENGTH SHALL BE 4000 PSI MINIMUM
2. REINFORCING SHALL BE PER AASHTO M170, CLASS II REINFORCED CONCRETE PIPE, PLUS ONE #4 BAR TOP AND BOTTOM, EACH SIDE.
3. WALLS MAY HAVE 1/4" TAPER. WALL THICKNESSES SHOWN ARE THE MINIMUM.
4. LIFT HOLES MAY BE PROVIDED IN THE SIDE WALLS FOR HANDLING.
5. END SECTION JOINT WILL BE A MATCHED FIT TO THE ADJOINING PIPE JOINT AT ALL INLET AND OUTLET ENDS. NON-FITTING JOINTS WILL REQUIRE A BUILT-IN-PLACE REINFORCED COLLAR CONNECTION WITH NO ADDITIONAL PAYMENT.
6. ALL END SECTIONS FOR PIPES WITH "D" OVER 24" ON SINGLE LINES WILL HAVE GALV. SAFETY BARS, SPACED NOT MORE THAN 24" ON CENTERS, AND INSTALLED PERPENDICULAR TO THE MAINLINE TRAFFIC FLOW. ALL END SECTIONS FOR MULTIPLE LINE PIPES WILL HAVE GRATES.
7. TYPICAL USE OF SAFETY END SECTIONS IS AT THE ENDS OF PIPES UNDER DRIVEWAYS OR SIDEROADS WHERE THE PIPE CULVERT IS PARALLEL TO THE MAINLINE AND FALLS INSIDE THE MAINLINE CLEAR ZONE WIDTH.

D	(MIN) GRATE LENGTH	GRATE WIDTH (TYP) #
15"	2'-4"	1'-9 5/8"
18"	2'-4"	2'-0 5/8"
24"	6'-4"	2'-6 5/8"
30"	8'-6"	3'-2 5/8"
36"	12'-4"	3'-8 5/8"
42"	14'-6"	4'-2 5/8"
48"	18'-4"	4'-10 5/8"

TYPICAL GRATE WIDTHS SHOWN ARE MEASURED FROM INSIDE TO INSIDE OF THE 3/8" THICK ANGLE IRON. GRATE FIT WITH END SECTION SHALL BE CHECKED BEFORE DELIVERY.

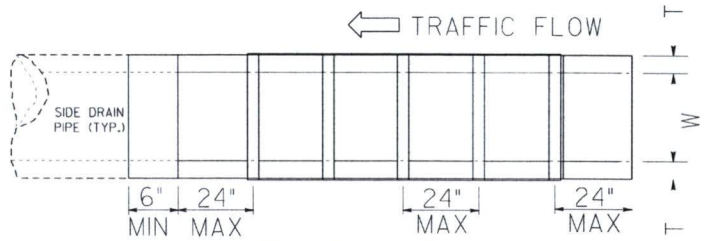

PLAN VIEW

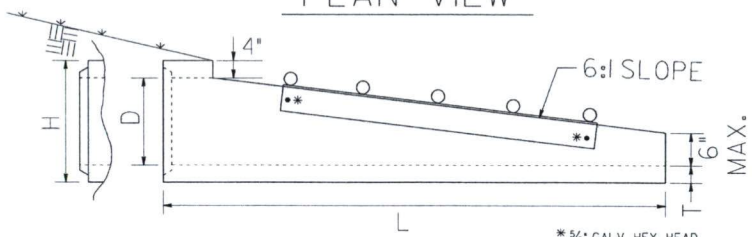

SIDE VIEW

* 5/8" GALV. HEX HEAD BOLT, WASHER & NUT (FOUR) CONNECTIONS

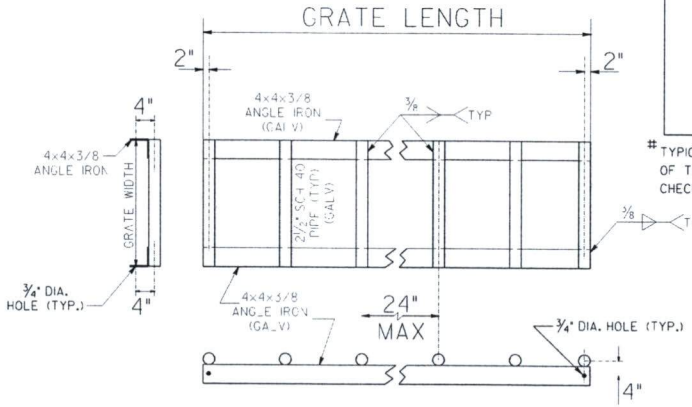

GALVANIZED SAFETY GRATE DETAIL

1-28-05	DATE	DEPARTMENT OF TRANSPORTATION STATE OF GEORGIA	
REVISED TO #22 PAGE 3	REVISION	STANDARD SAFETY END SECTION (CONCRETE) (FOR SIDE DRAIN PIPE-OR FOR STORM DRAIN PIPE PARALLEL TO MAINLINE) ALTERNATE 3	
		NO SCALE	OCT., 2000
G.L.O.	BY	DESIGNED ___ DRAWN ___ TRACED ___ CHECKED ___	(SUBMITTED) STATE ROAD & AIRPORT DESIGN ENGINEER (APPROVED) CHIEF ENGINEER
			NUMBER 1122 SHEET 3 OF 3

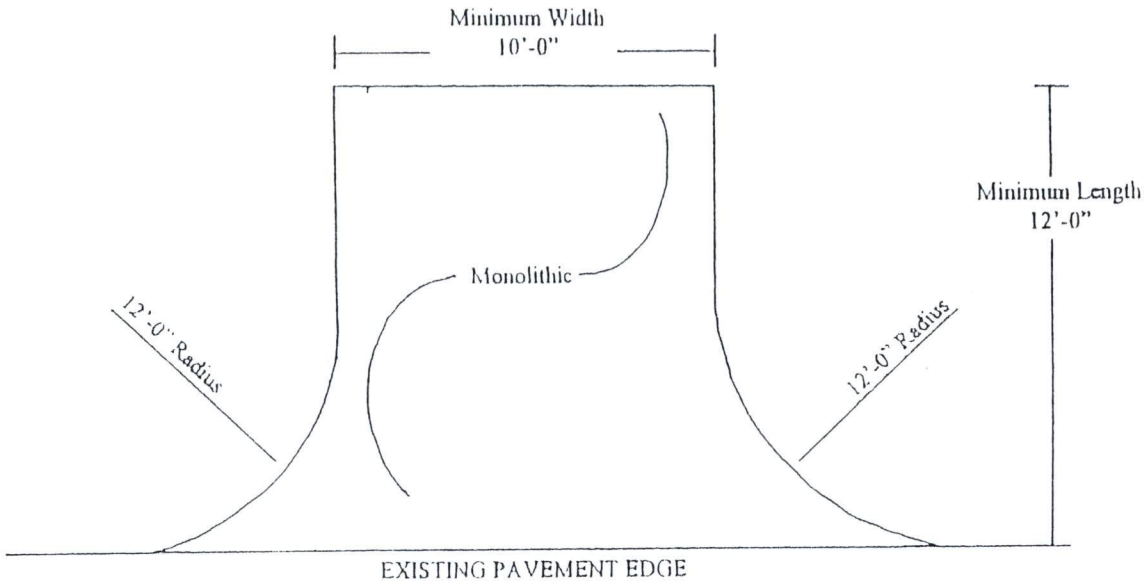

* * * * * * * * NOTES * * * * * * * *

1. *ALL CONCRETE TO BE CLASS "A" 3000 PSI.*
2. *MINIMUM 6" CONCRETE IN RIGHT-OF-WAY. MINIMUM 4" CONCRETE OUTSIDE RIGHT-OF-WAY.*
3. *BUILDER SHALL NOT DISTURB OR DAMAGE ROADWAY PAVEMENT. ANY DAMAGE DONE TO EXISTING ROADWAY PAVEMENT WILL BE REPAIRED BY THE BUILDER AT THE DISCRETION OF BARROW COUNTY.*
4. *BUILDER IS RESPONSIBLE FOR CONSTRUCTION OF ENTRANCE ACCORDING TO PLAN.*
5. *THIS DESIGN PERTAINS ONLY TO THOSE DRIVEWAY ENTRANCES REFERED TO IN THE BARROW COUNTY ZONING RESOLUTION,, ARTICLE V, SECTION 5.5 (2) (C).*

BARROW COUNTY
STANDARD DRAWING

Zoning Resolution
Article V, Section 5.5 (2) (c).

NOT TO SCALE

DATE: DEC. 29, 1998.

· · · LEGEND · · ·

FT. = FEET

C & G = CURB and GUTTER

CONC. = CONCRETE

· · · NOTE · · ·

SLOPE "AS SHOWN" IN SECTION A-A IS TO BE CONSTRUCTED WHEN SIDEWALKS ARE PROVIDED AND WHEN SIDEWALKS ARE NOT PROVIDED.

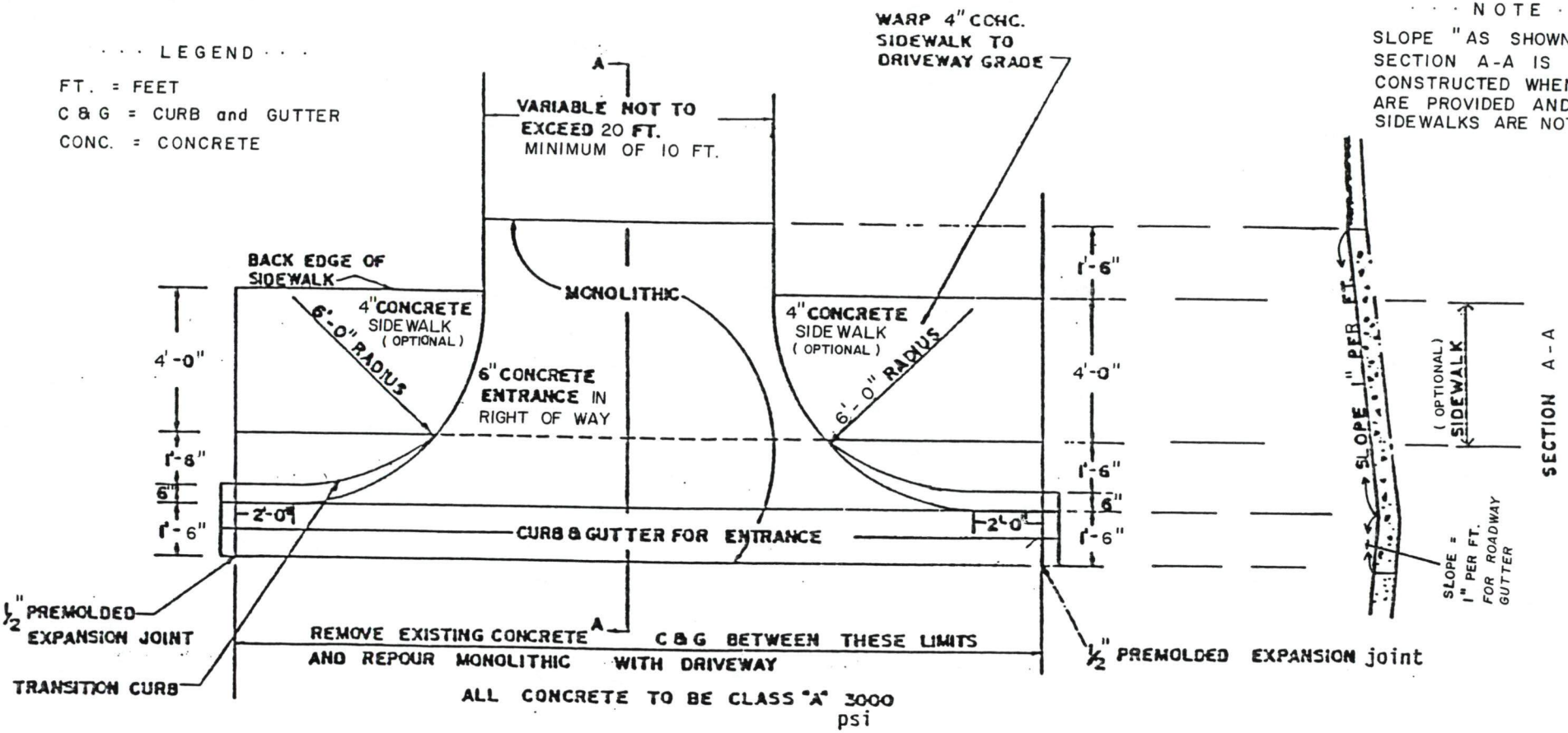

PLAN

· · · · · NOTES · · · · ·

1. BUILDER SHALL NOT DISTURB OR DAMAGE EXISTING ROADWAY PAVEMENT. ANY DAMAGE DONE TO EXISTING ROADWAY PAVEMENT WILL BE REPAIRED BY BUILDER AT THE DISCRETION OF BARROW COUNTY.

2. BUILDER IS RESPONSIBLE FOR CONSTRUCTION OF ENTRANCE ACCORDING TO PLAN & SECTION A-A ABOVE. MAKE SURE ROADWAY GUTTER SLOPE, AS SHOWN IN SECTION A-A, IS CONSTRUCTED.

BARROW COUNTY
ENGINEERING DEPARTMENT
STANDARD DRAWING

Residential Driveway Entrance
With OPTIONAL SIDEWALK

DATE: NOV. 20, 1998

NOT TO SCALE

JOINING A DRIVEWAY WITH HIGHBACK C & G

1.

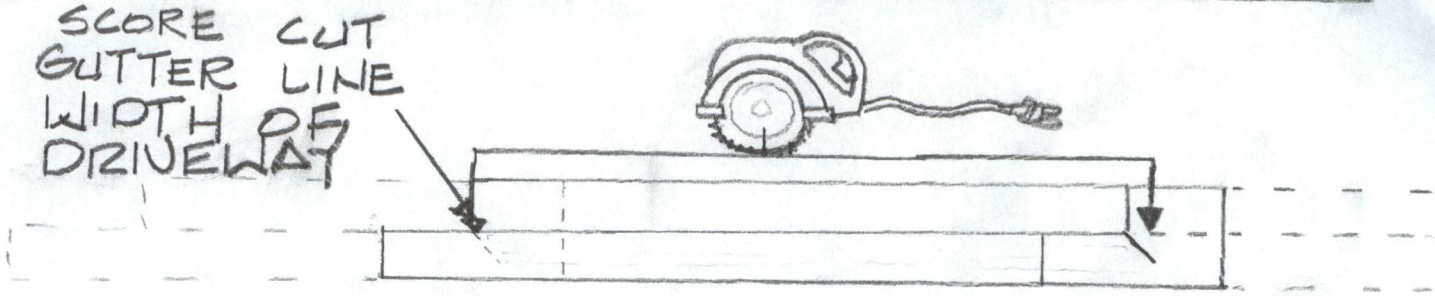

2.

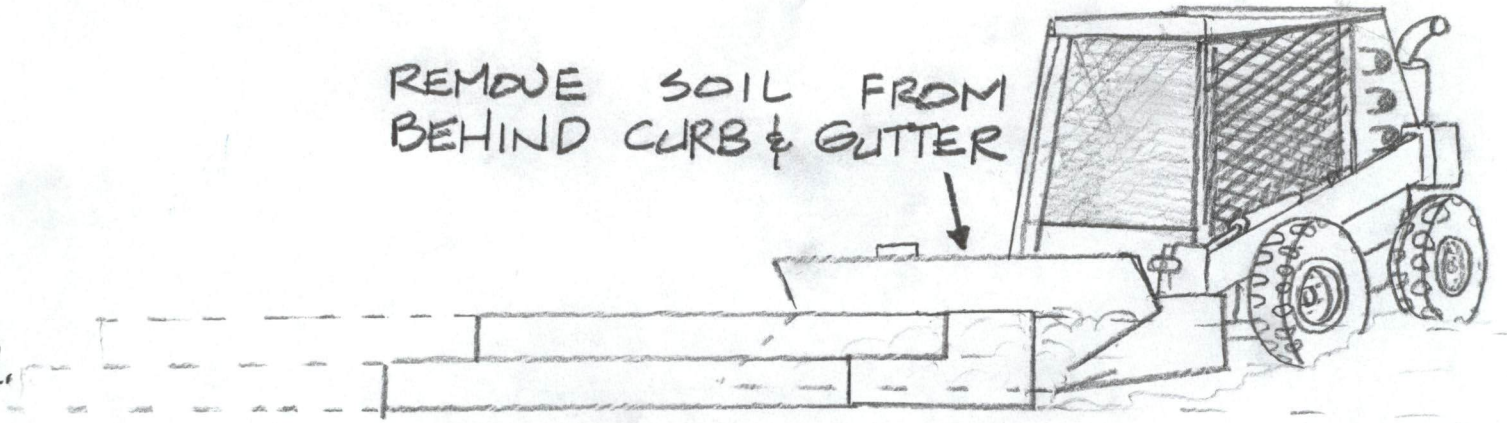

3.

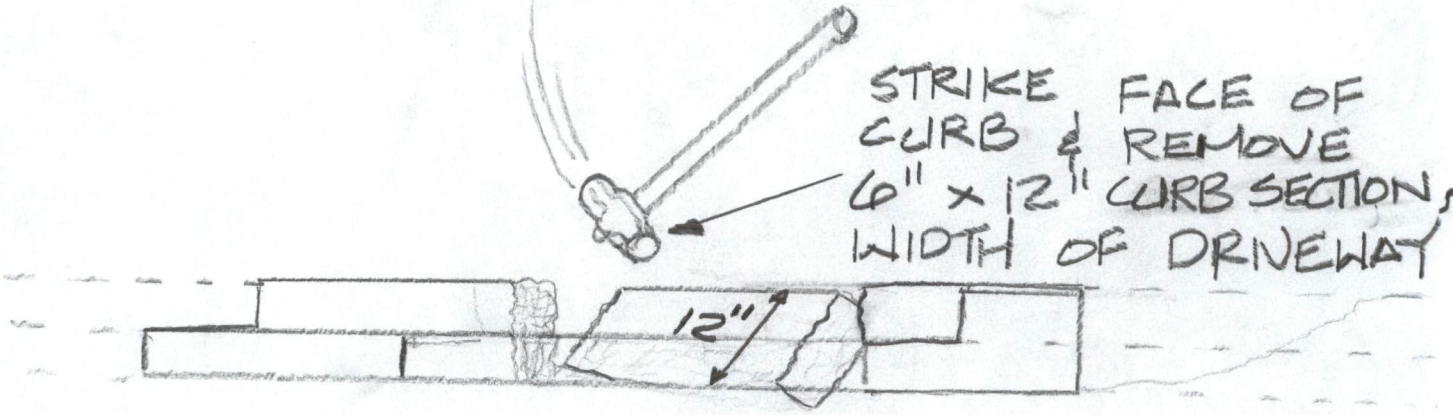
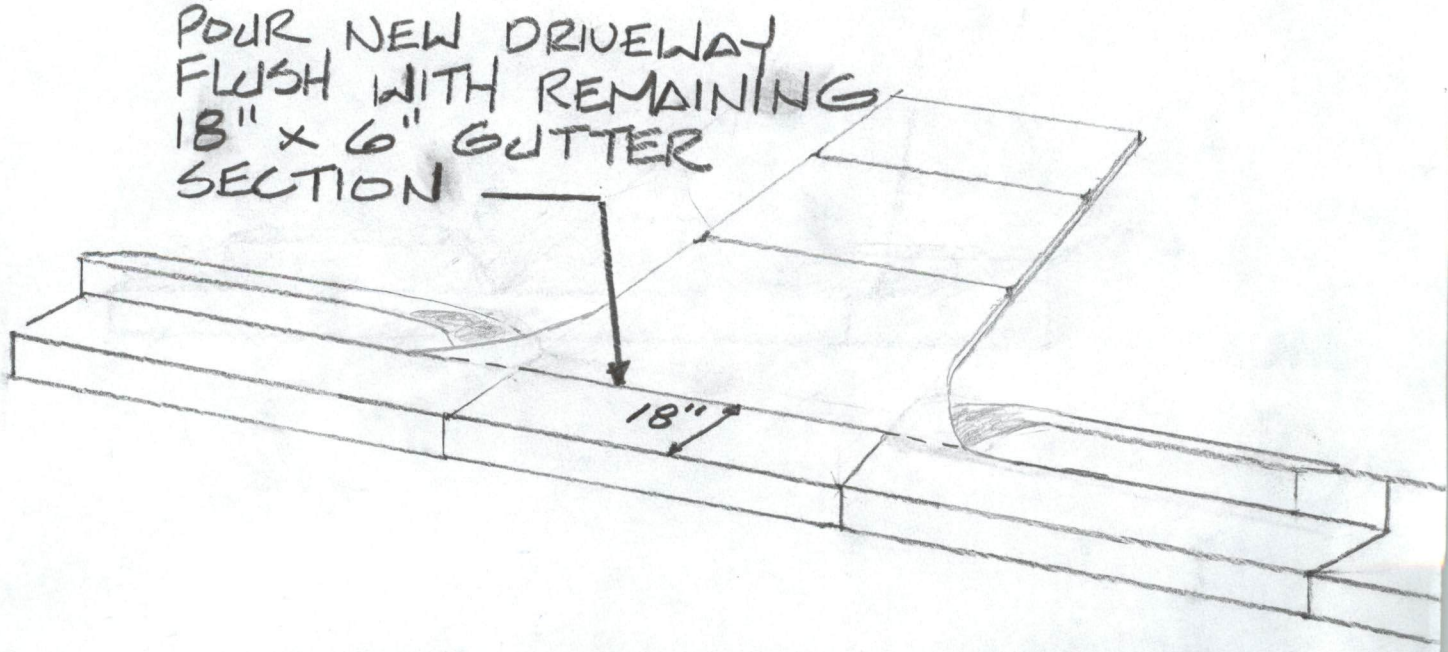
4.